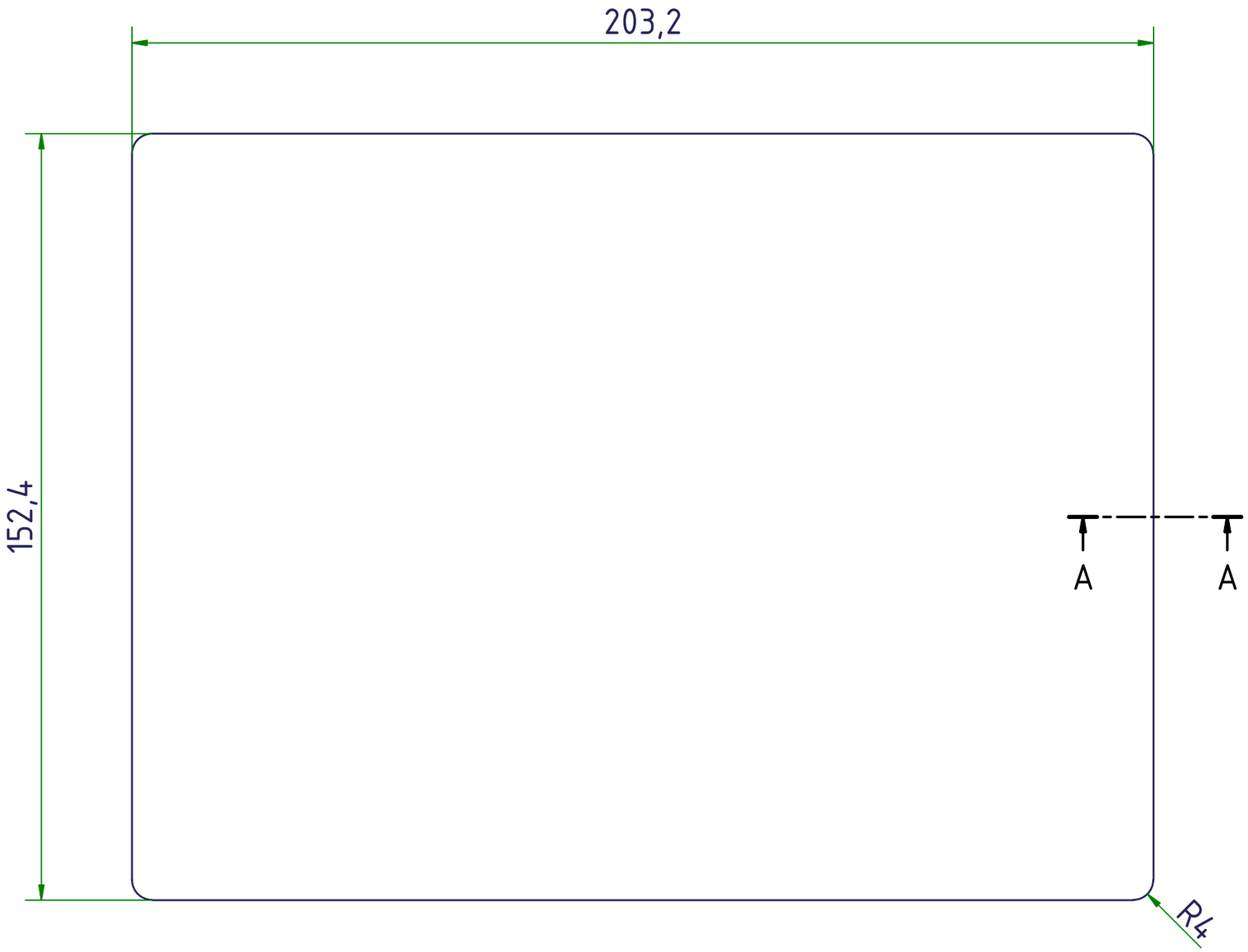

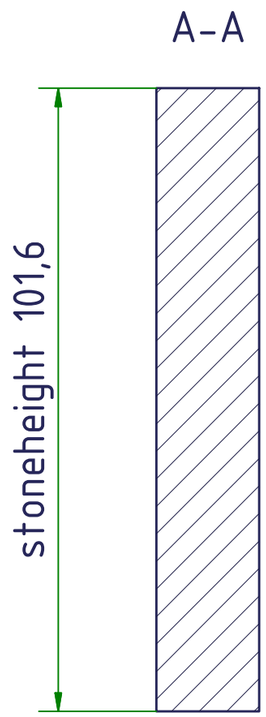

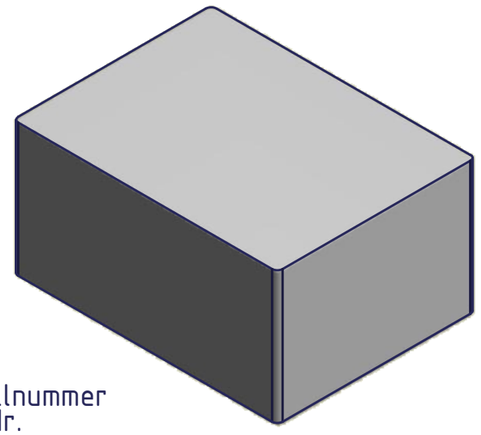

Modellnummer
WZ-Nr.
DP-Nr.

surface: 309,54 cm^2
volume: 0,111 ft^3

According to General terms and conditions KOBRA is not responsible for any infringements of protected rights and third party claims of shown designs and therefore delivered products.

Customer		Machine	
Plant		Pallet Size	
Order No.			

	Date	Name
CHG	15.02.11	blechschmidt_a
ML Check	. .	
Order Check		

Entry	Modification	Date	Name

IT No. 09_1220000_00048_IPT1.ipt

ERP-Item DXF-L. QTY -

Zuschnitt :
Norm : Verfahren :

Rectangle 202,2x152,4x101,6

07.1220000.00095
no chamfer

09.1220000.00048.IDW2

ver. 1

org. Artikelnr.:

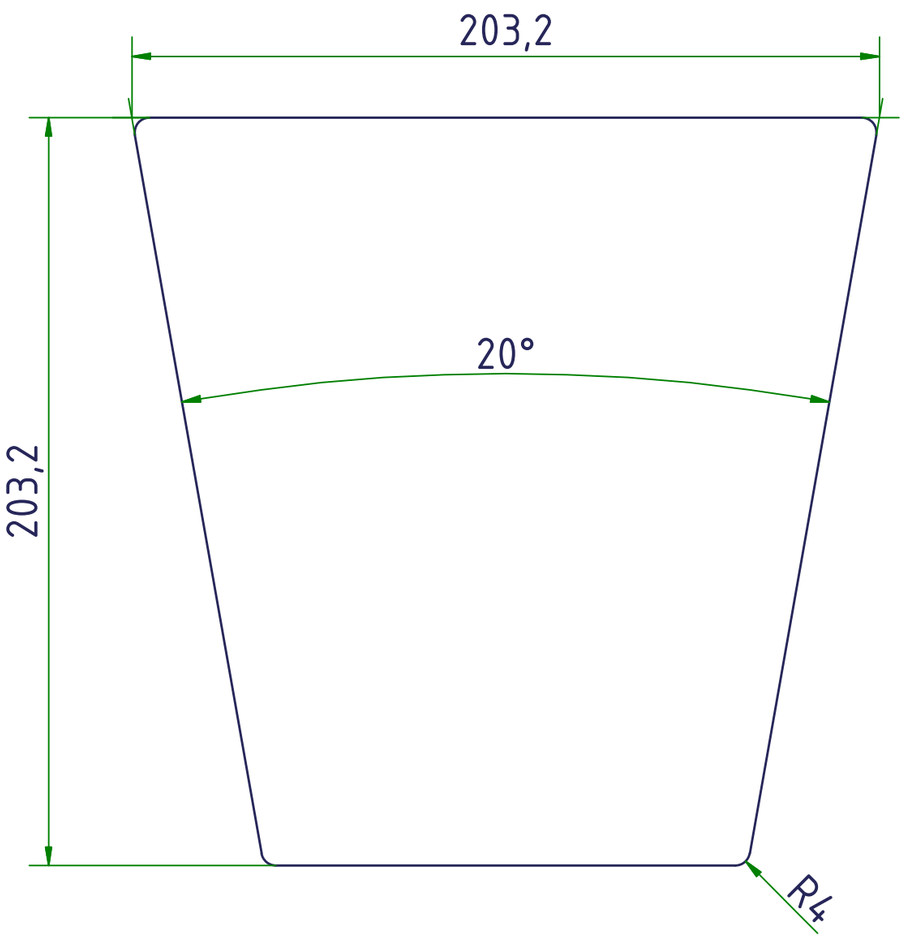

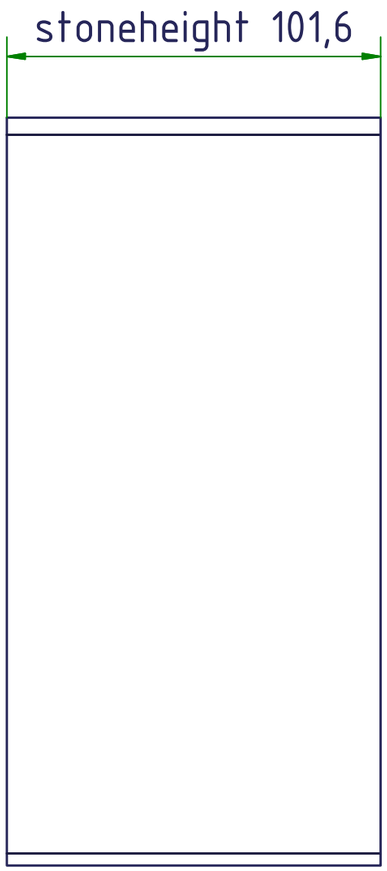

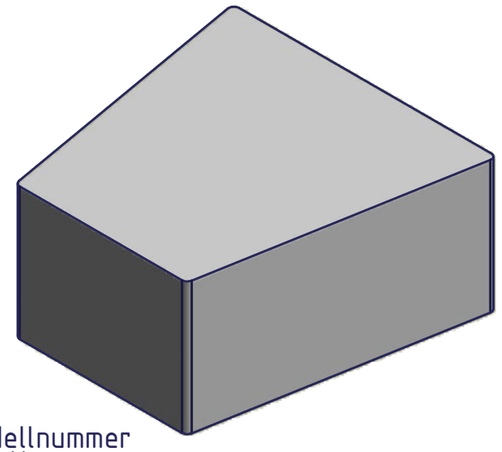

Modellnummer
WZ-Nr.
DP-Nr.

surface: 339,95 cm^2
volume: 0,122 ft^3

According to General terms and conditions KOBRA is not responsible for any infringements of protected rights and third party claims of shown designs and therefore delivered products.

Customer		Machine	
Plant		Pallet Size	
Order No.			Date / Name
		CHG	15.02.11 / blechschmidt_a
		ML Check	. .
		Order Check	
Entry	Modification	Date	Name

IT No. 09_6020000_00001_IPT1.IPT

ERP-Item | DXF-L. | QTY -

Zuschnitt :
Norm : Verfahren :

"Munich Wall" 203,2x203,2x101,6

07.6020000.00001
no chamfer

09.6020000.00001.IDW2

Ver. 1

org. Artikelnr.: 10.6020000.00037

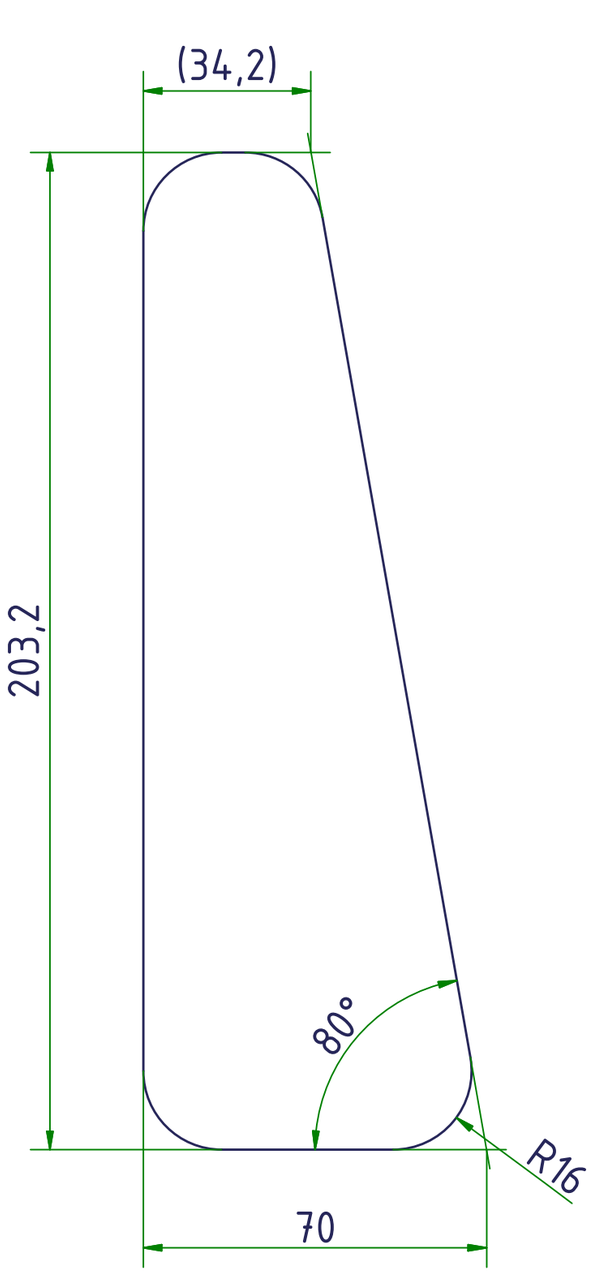

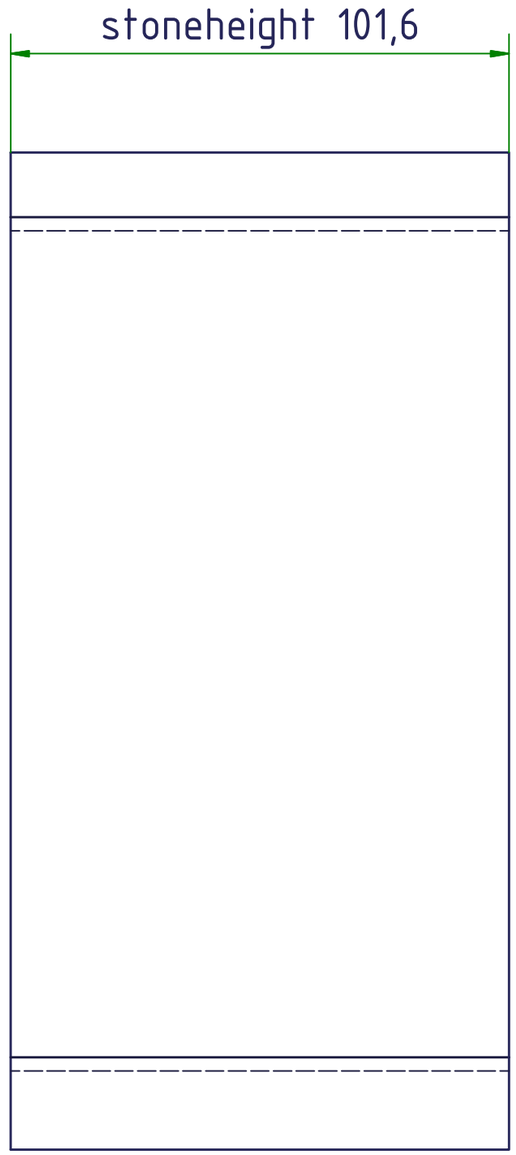

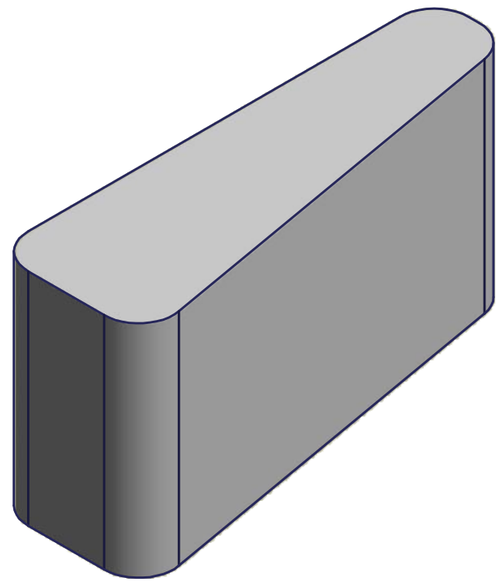

Modellnummer
WZ-Nr.
DP-Nr.

According to General terms and conditions KOBRA is not responsible for any infringements of protected rights and third party claims of shown designs and therefore delivered products.

volume: 0,037 ft³

Customer		Machine	
Plant		Pallet Size	
Order No.			

	Date	Name
CHG	15.02.11	blechschmidt_a
ML Check	. .	
Order Check		

Entry	Modification	Date	Name
A	Kontur geändert	21.02.2011	Rauner

IT No. 09_6020000_00002_IPT1.IPT

ERP-Item | DXF-L. | QTY -

Zuschnitt :
Norm : Verfahren :

Dummy-Stone (left) 70x203,2x101,6

07.6020000.00002

09.6020000.00002.IDW2

ver. 2

org. Artikelnr.: 09.6020000.00001

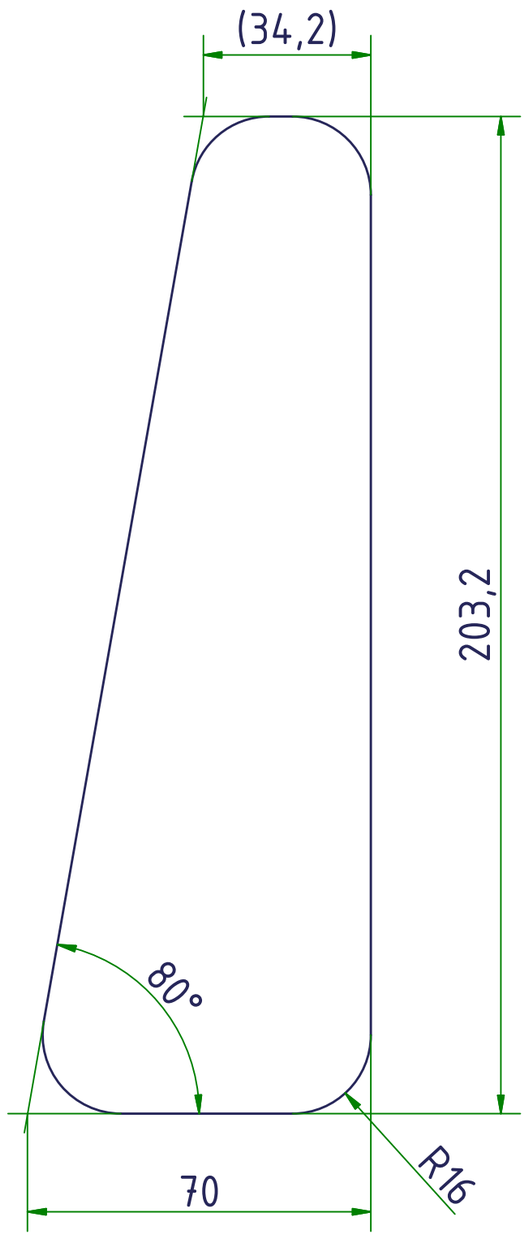

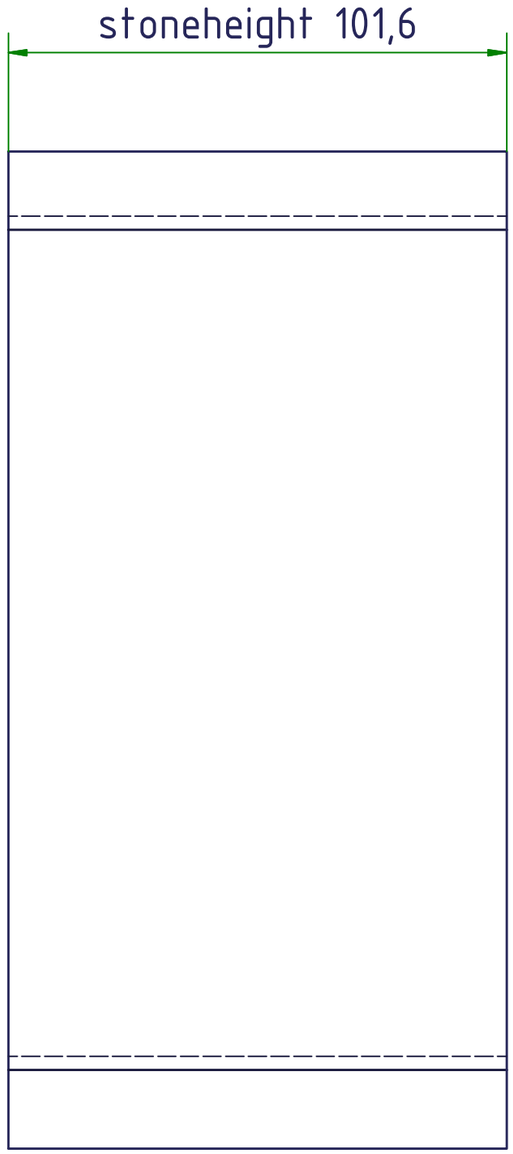

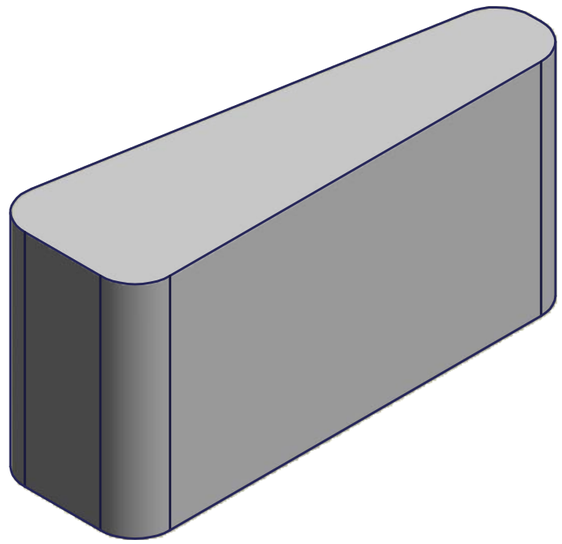

Modellnummer
WZ-Nr.
DP-Nr.

volume: 0,037 ft³

According to General terms and conditions KOBRA is not responsible for any infringements of protected rights and third party claims of shown designs and therefore delivered products.

Customer			Machine			
Plant			Pallet Size			
Order No.				Date	Name	
			CHG	15.02.11	blechschmidt_a	
			ML Check	. .		
			Order Check			
A	Kontur geändert	21.02.2011	Rauner			
Entry	Modification	Date	Name	IT No.	09_6020000_00003_IPT1.IPT	

ERP-Item | DXF-L. | QTY -

Zuschnitt :
Norm : Verfahren :

Dummy-Stone (right) 70x203,2x101,6

07.6020000.00003

09.6020000.00003.IDW2

Ver. 2

org. Artikelnr.: 09.6020000.00002

Kernbetonseite / base mix

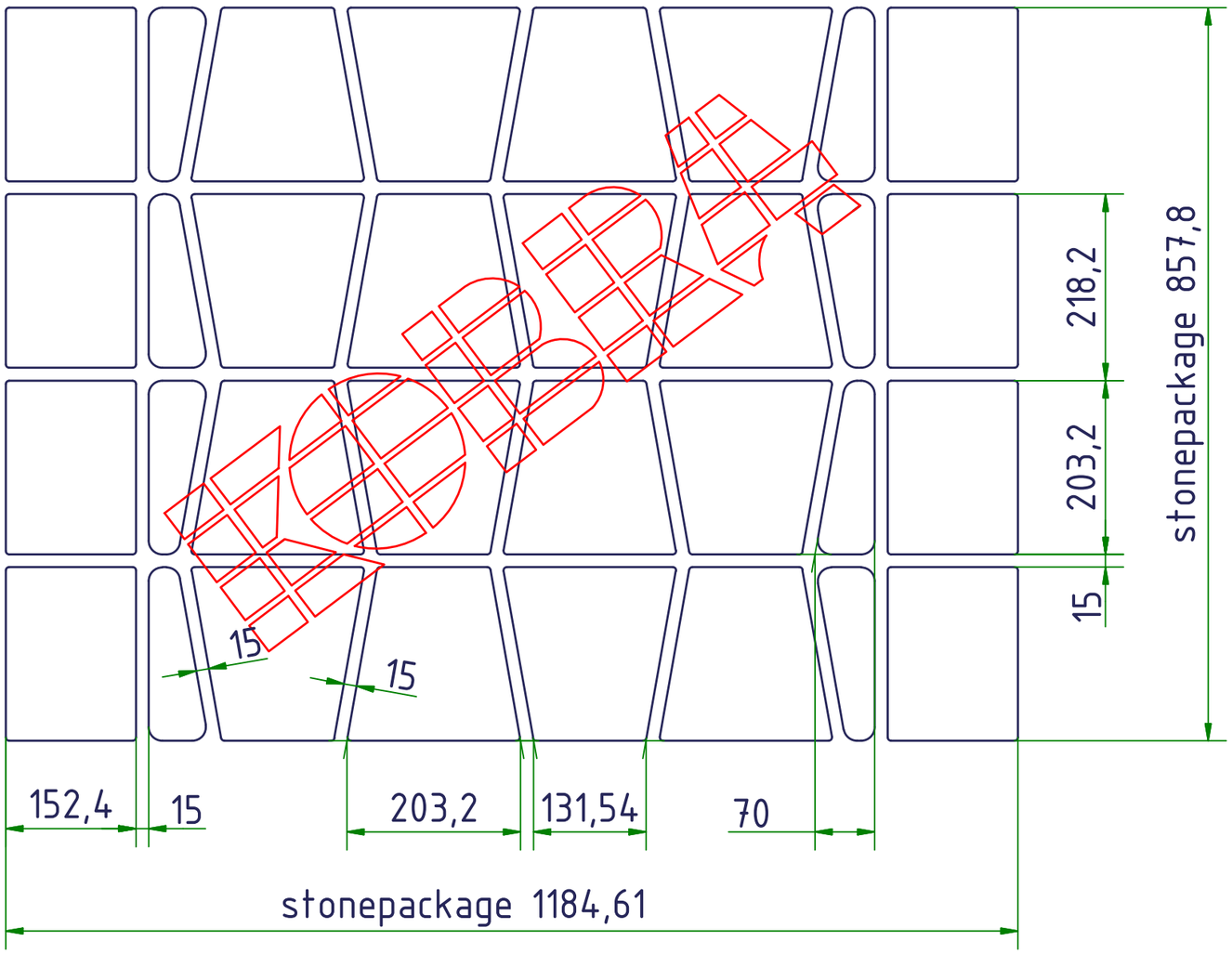

Produktionsrichtung
filling direction

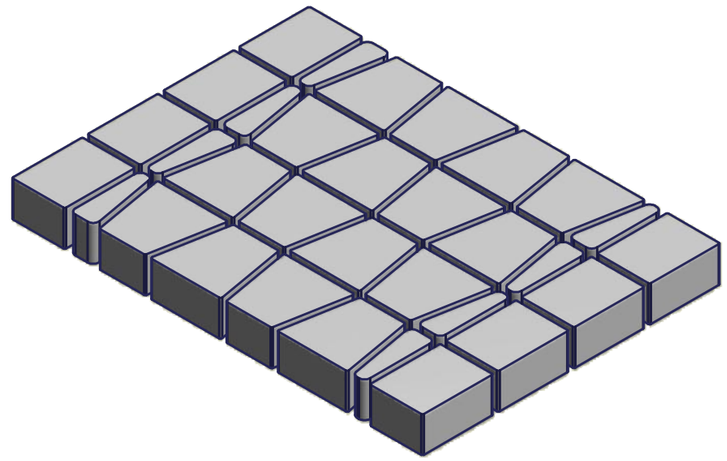

16	07.6020000.00001	"Munich Wall" 203,2x203,2x101,6	
4	07.6020000.00003	Dummy-Stein (rechts) 35,83x203,2x101,6	
4	07.6020000.00002	Dummy-Stein (links) 35,83x203,2x101,6	
8	07.1220000.00095	Rechteckstein 203,2x152,4x101,6	
Men	Artikel-Nr.	Bezeichnung	ERP-Artikel

Stückliste

Entry	Modification	Date	Name
A	Steinanzahl geändert	21.02.2011	Rauner

According to General terms and conditions KOBRA is not responsible for any infringements of protected rights and third party claims of shown designs and therefore delivered products.

Customer		Machine	
Plant		Pallet Size	
Order No.			

	Date	Name
CHG	15.02.11	blechschmidt_a
ML Check	. .	
Order Check		

ERP-Item | DXF-L. | QTY -

Zuschnitt :
Norm : Verfahren :

16/8/4/4 "Munich Wall"
203,2x203,2/152,4x101,6
07.6020000.00001-3 / 07.1220000.00095

29.6020014.00001.IDW2

ver. 2

IT No. 29_6020014_00001_IAM1.iam

org. Artikelnr.: