TREMRON
WE MAKE IT EASY

36" WOOD BURNING OUTDOOR FIREPLACE

Installation Instructions using Keystone Stonegate Country Manor 3-pc System

KEYSTONE®
RETAINING WALL SYSTEMS

KIT CONTAINS

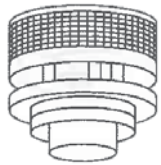

Contemporary Termination Round

12" and 48" Chimney Sections

Storm Collar

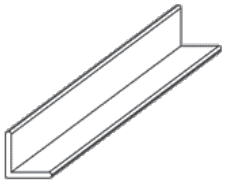

Steel Lintel

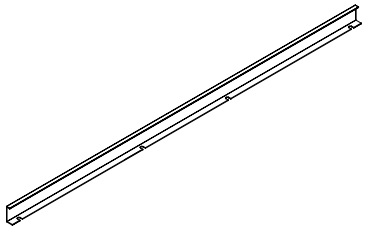

Fireplace Trim Piece

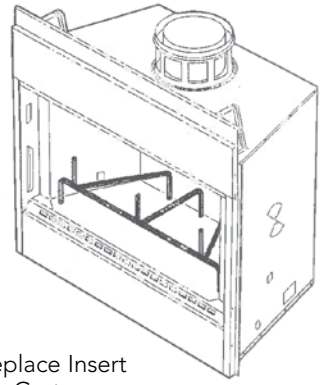

Fireplace Insert with Grate

BASIC TOOLS

SAFETY

Safety Glasses

Gloves

ALTERATIONS

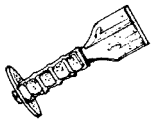

Stone Chisel

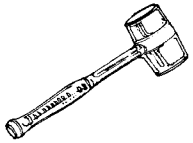

Mallet

Concrete Saw

LAYOUT

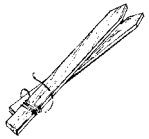

Layout Stakes

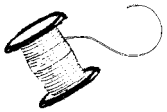

Line

LEVELING

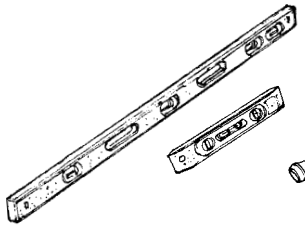

Level(s)

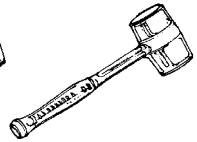

Mallet

GENERAL

Shovel

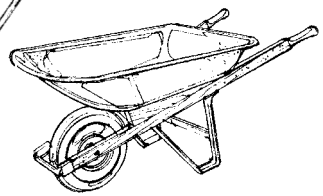

Wheel Barrow

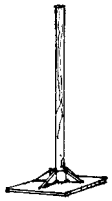

Hand Compactor

FINISHING

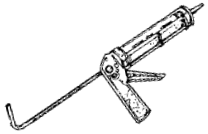

Caulking Gun

Exterior Grade Construction Adhesive

36" WOOD BURNING OUTDOOR FIREPLACE

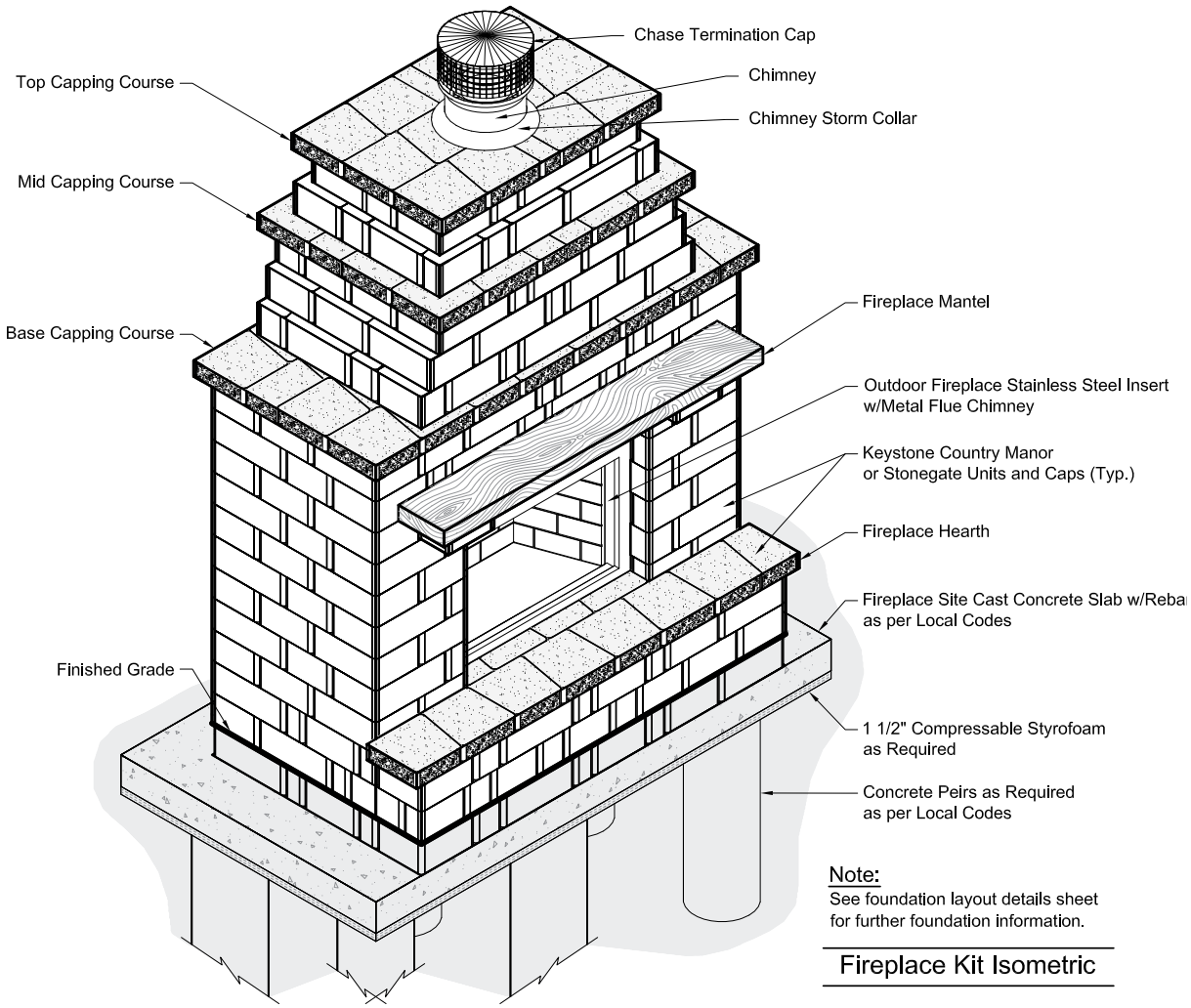

Note:
See foundation layout details sheet for further foundation information.

Fireplace Kit Isometric

You will need:

110 - 16"/14"w Country Manor/Stonegate Large units

109 - 12"/10"w Country Manor/Stonegate Medium units

113 - 6"/4"w Country Manor/Stonegate Small units

78 - 12"/10"w Country Manor/Stonegate caps

570 - Interlocking Pins (approx.) (use where alignment allows)

1 - Mantel Piece (3"h x 70"w x 10"d)

1 - 36" Fireplace Insert (contact Keystone for specs & retail options)

25 - Tubes Exterior Grade Concrete Adhesive (apply two ¼" strips of concrete adhesive on each course)

Foundation system requirements, per local code (see pg. 4)

Notes:

- All Keystone Country Manor and Stonegate Country Manor units are 6"h x 10"d.
- Keystone recommends the use of its fiberglass pins when alignment allows. Use pins in conjunction with concrete adhesive to maximize stability of your structure.

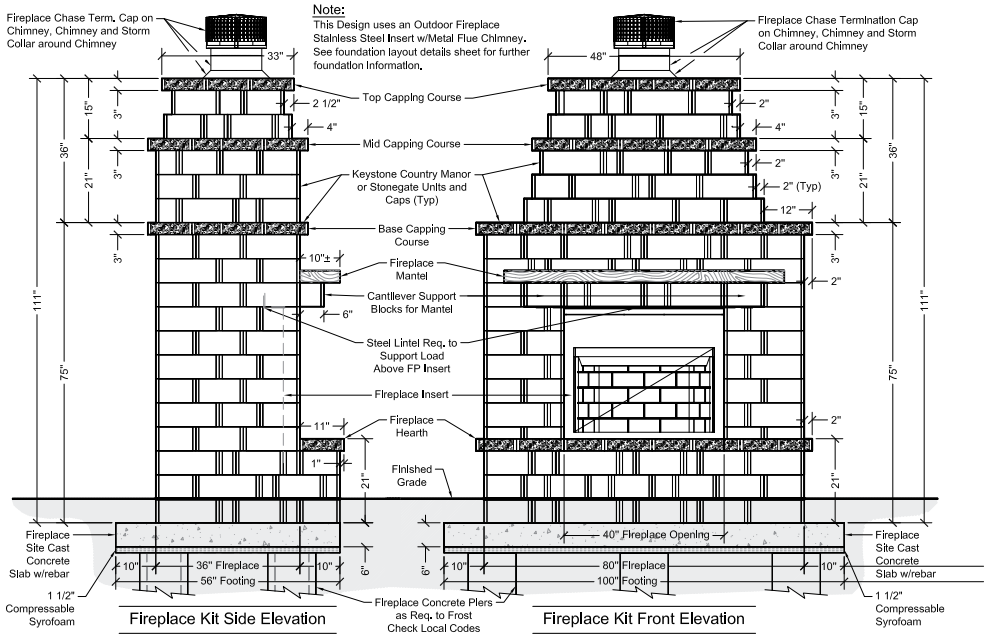

Alternative capping options (poured concrete or cut stone): Supply steel angle or beam support for concrete or stone mantel piece as required.

Fireplace insert: See local codes for fireplace/chimney clearances and chimney extension above roof as required. Please refer to the installation manual that is included with the fireplace insert for proper installation instructions.

Foundation Isometric

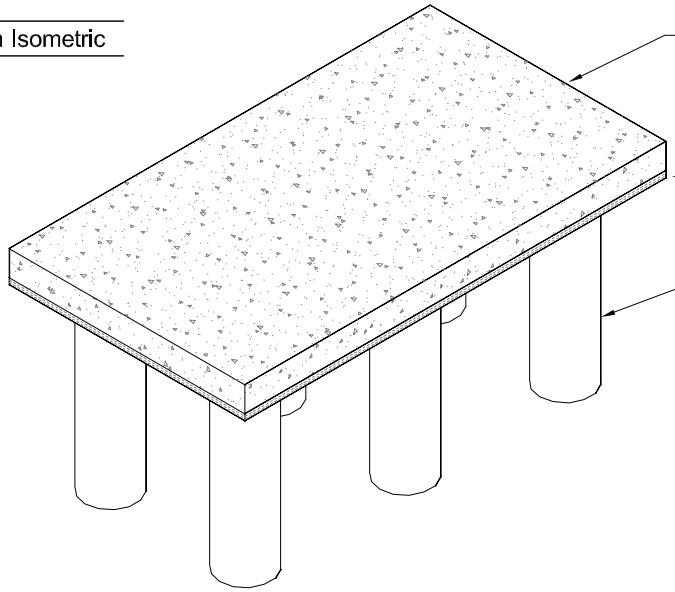

Fireplace Site Cast Concrete Foundation Slab 6" thick w/Rebar to Local Codes

1 1/2" Compressible Styrofoam

Footings to Frost Vary by Region.

12" Dia. Concrete Piers in Sono-Tube or Equal Forms Include Rebar into Foundation to Local Codes (Typ)

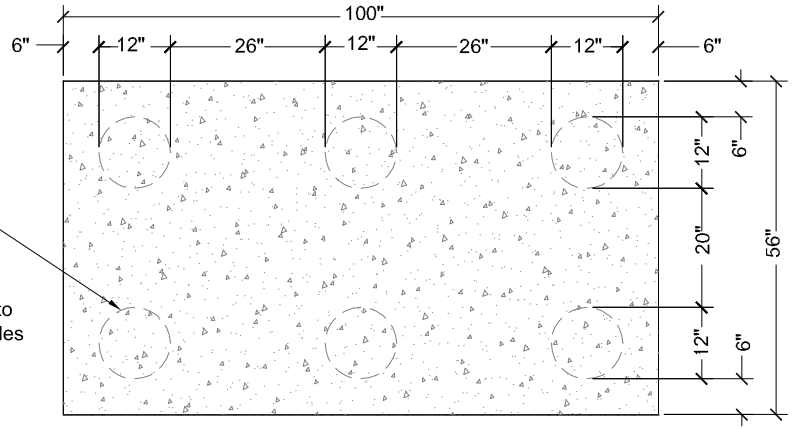

Foundation Plan

COURSE BY COURSE INSTRUCTIONS

1st Course Isometric

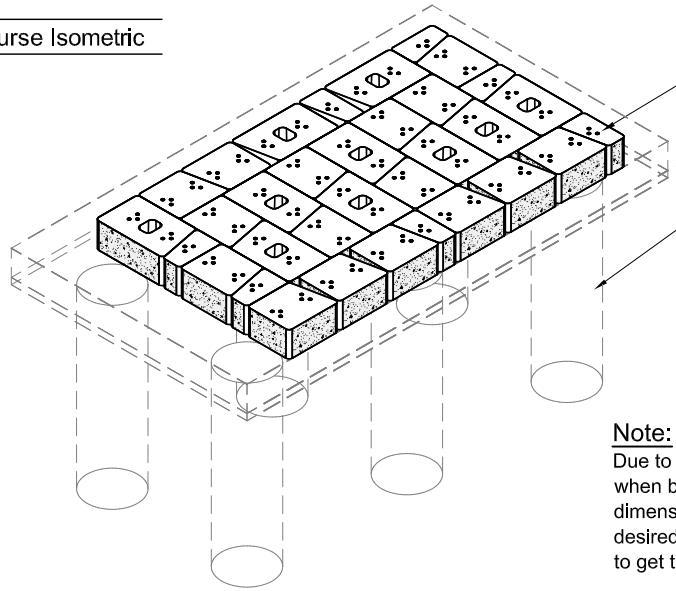

Note:
Due to block outside face texture variances when building the fireplace courses the outside dimensions of the courses may get wider than desired. If required cut a interior perimeter unit to get the required outside dimension.

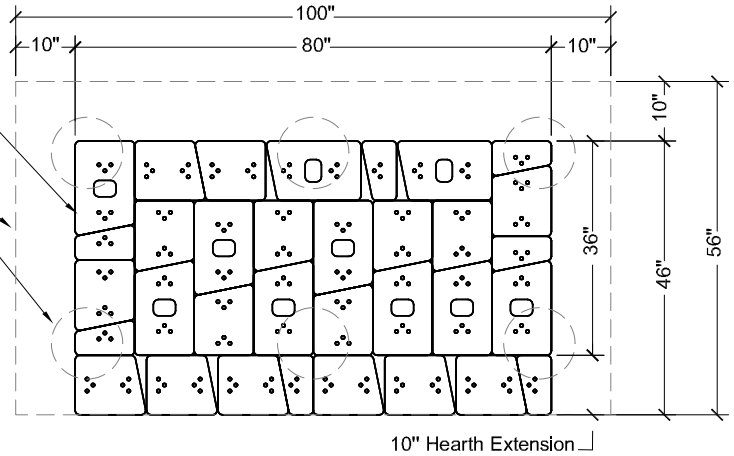

1st Course Plan

2nd Course Isometric

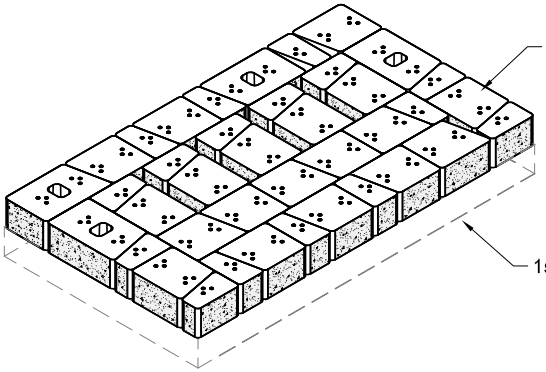

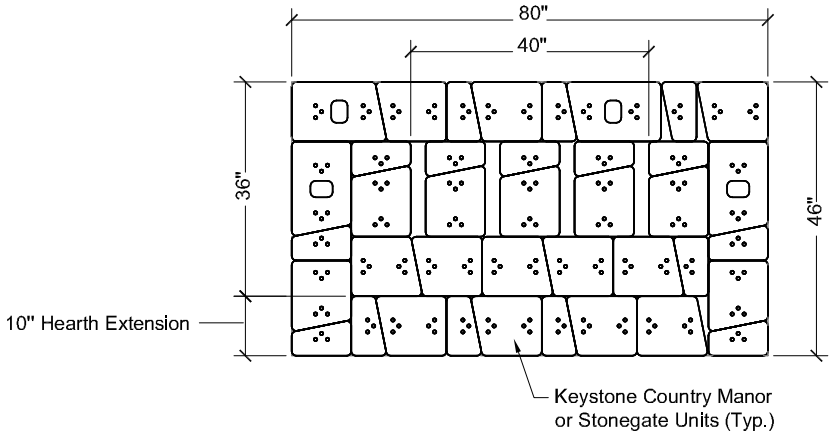

2nd Course Plan

3rd Course Isometric

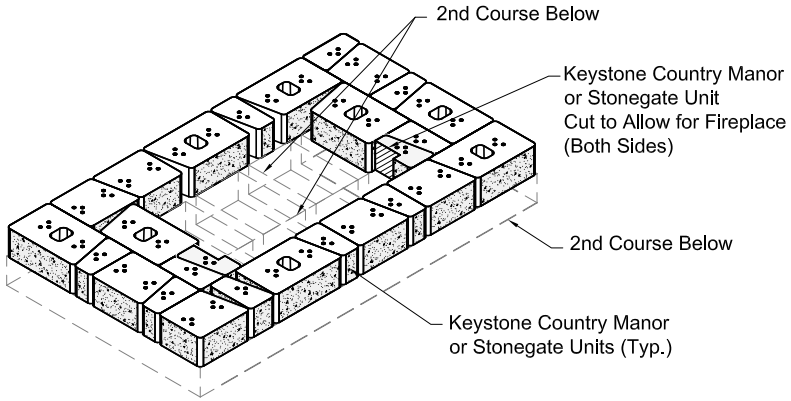

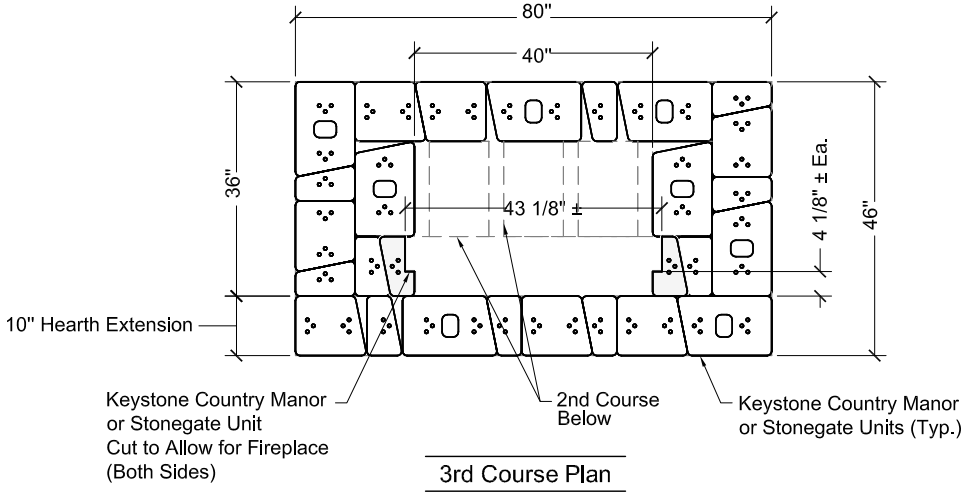

3rd Course Plan

Block Cutting Note:

Using a concrete saw or wheel grinder tool w/masonry disk, cut block units as needed.
Block units to be cut due to obstruction are labeled with solid hatching.
Block units to be cut to fit are labeled with angular hatching.

3rd Course Fireplace Base Isometric

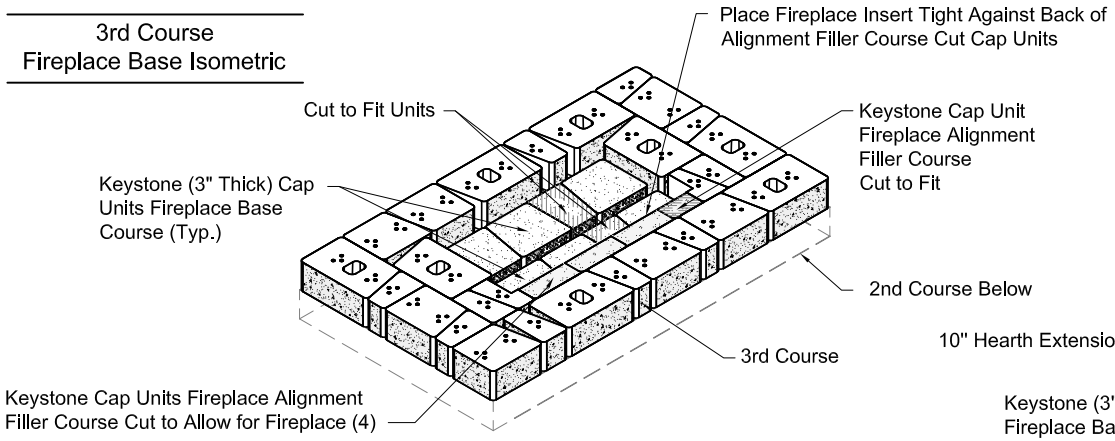

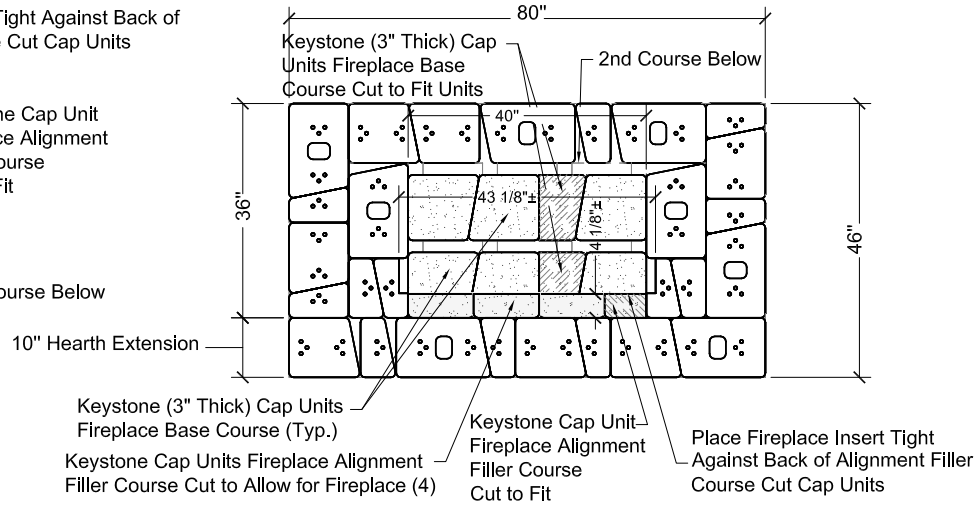

3rd Course Fireplace Base Plan

Block Cutting Note:

Block units to be cut due to obstruction are labeled with solid hatching.
Block units to be cut to fit are labeled with angular hatching.

3rd Course Capping Isometric

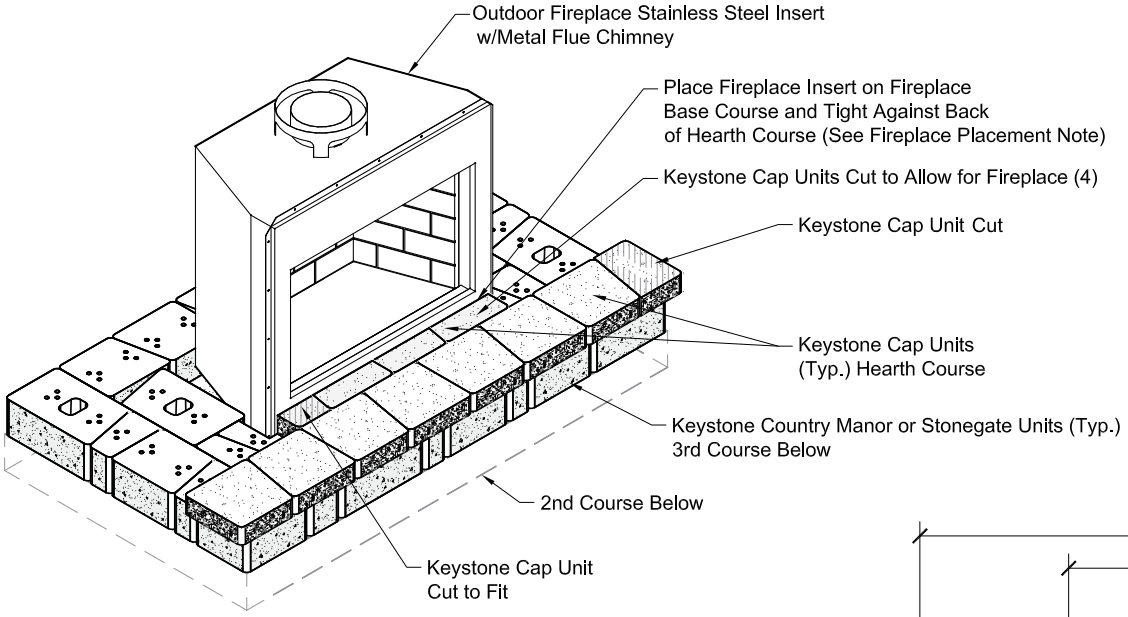

Fireplace Placement Note:

Prior to placing the fireplace insert for proper removal of the fireplace stainless steel face protective wrap peel back the outside portions of the protective wrap where it will come in contact with block units, cap units and top trim piece.

Cap Unit Note:

Cap units to be cut due to obstruction are labeled with solid hatching.
Cap units to be cut to fit are labeled with angular hatching.

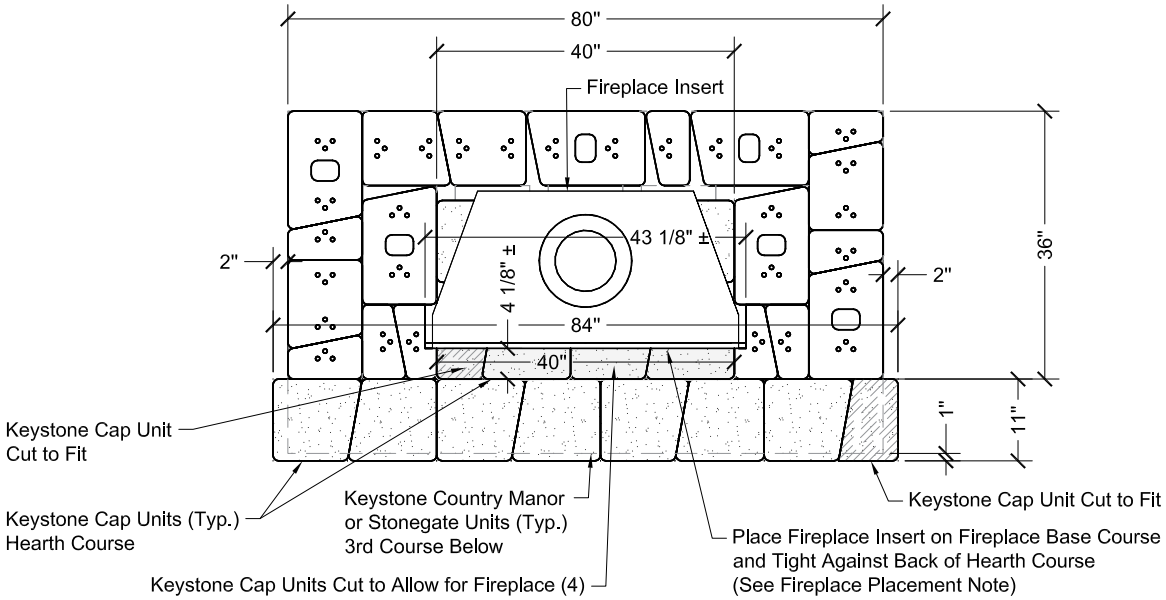

3rd Course Capping Plan

Fireplace Note:

Install fireplace and chimney components as per fireplace manufacturers installation instructions.

4th Course Isometric

Fireplace Installation Note:

The outside corners of the fireplace insert face should contact the small end units at the inside end of the two inside walls. If the fireplace insert does not contact the small units at each side trim the front and or side units below to allow the fireplace insert to move forward to contact the small units at each odd numbered course.

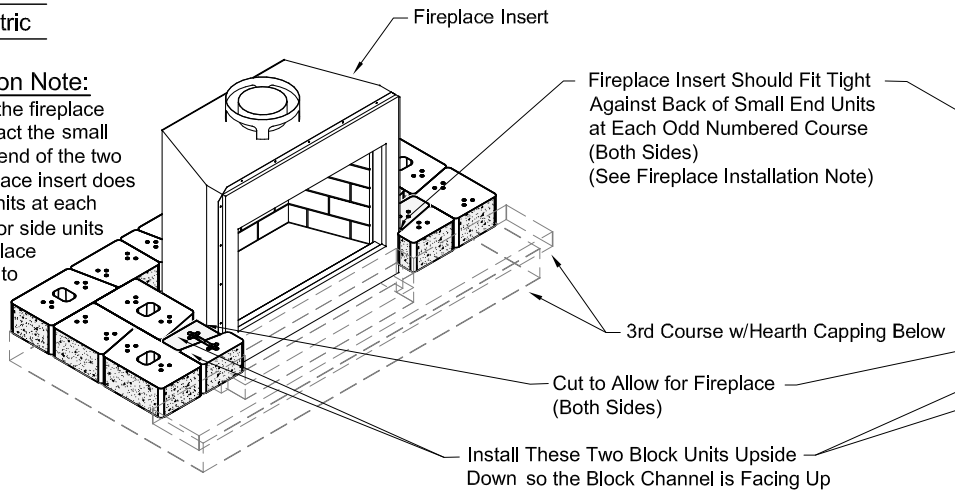

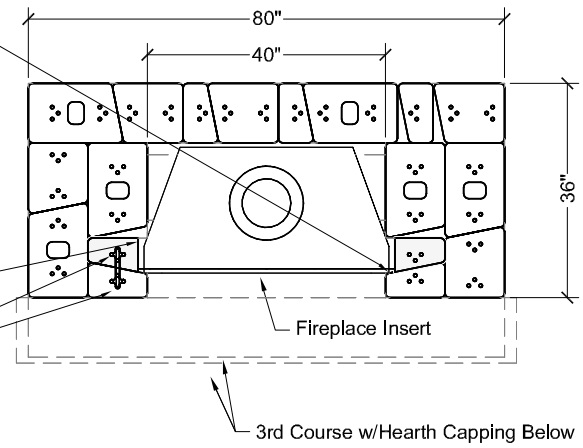

Block Cutting Note:

Block units to be cut due to obstruction are labeled with solid hatching.
Block units to be cut to fit are labeled with angular hatching.

4th Course Plan

5th Course Isometric

Fireplace Note:

Install fireplace and chimney components as per fireplace manufacturers installation instructions.

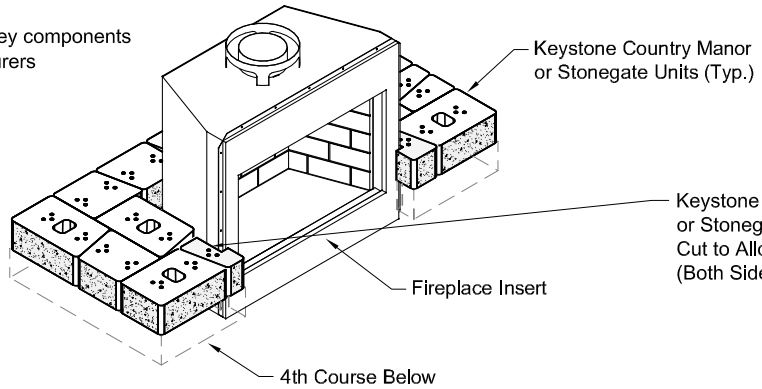

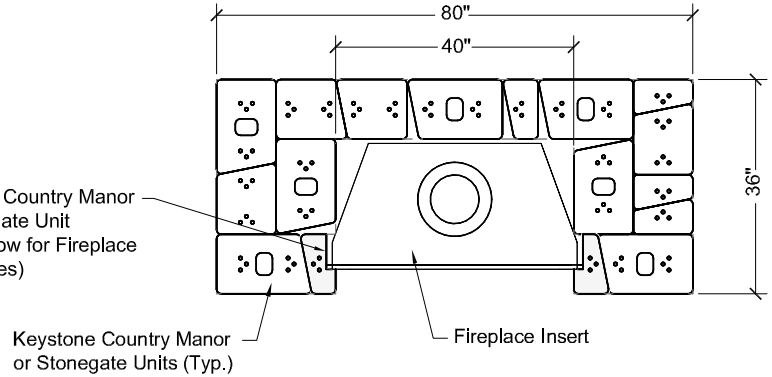

Block Cutting Note:

Block units to be cut due to obstruction are labeled with solid hatching.
Block units to be cut to fit are labeled with angular hatching.

5th Course Plan

6th Course Isometric

Fireplace Note:
Install fireplace and chimney components as per fireplace manufacturers installation instructions.

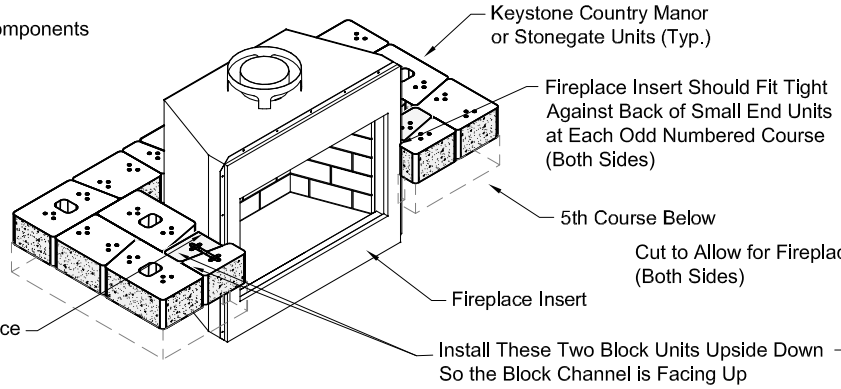

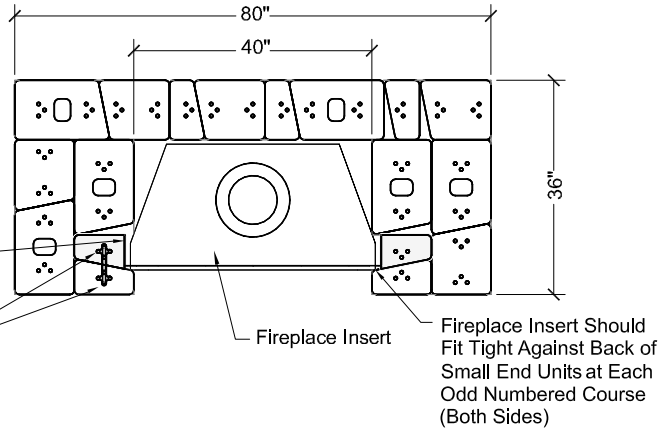

Block Cutting Note:
Block units to be cut due to obstruction are labeled with solid hatching.
Block units to be cut to fit are labeled with angular hatching.

6th Course Plan

7th Course Isometric

Fireplace Note:
Install fireplace and chimney components as per fireplace manufacturers installation instructions.

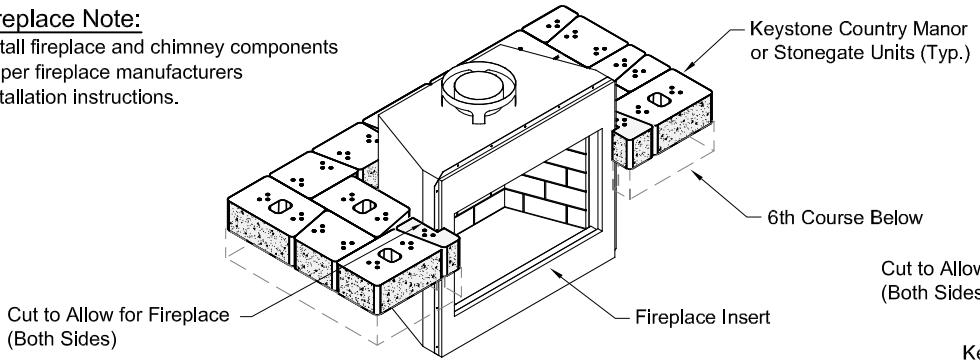

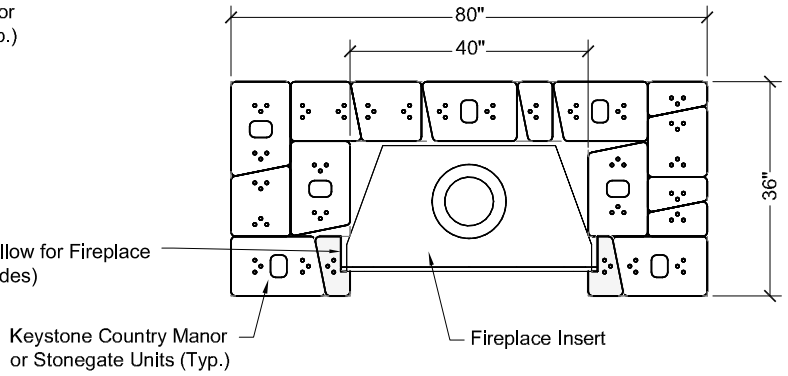

Block Cutting Note:
Block units to be cut due to obstruction are labeled with solid hatching.
Block units to be cut to fit are labeled with angular hatching.

7th Course Plan

8th Course Isometric

Fireplace Note:

Install fireplace and chimney components as per fireplace manufacturers installation instructions.

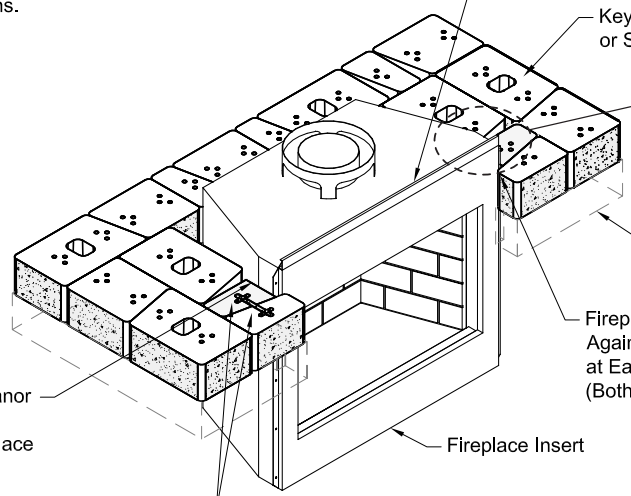

Fireplace Top Trim Piece Placement Note:

For proper removal of the top trim piece stainless steel face protective wrap, prior to installing the top trim piece peel back the bottom portion of the protective wrap where it will come in contact with the top of the fireplace.
Using a Phillips head pattern screwdriver loosen and remove existing firebox cabinet front top screws. Place supplied top trim piece across the front top of firebox cabinet aligning the top trim piece holes with the existing screw holes and flush with the front face of the firebox cabinet. Reinstall removed screws through the top trim piece and into the existing holes and secure the top trim piece to the fireplace cabinet.

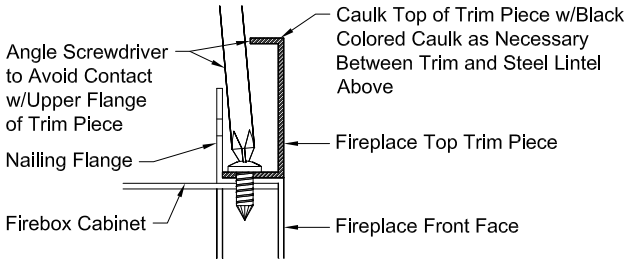

Fireplace Top Trim Piece Detail

Block Cutting Note:

Block units to be cut due to obstruction are labeled with solid hatching.
Block units to be cut to fit are labeled with angular hatching.

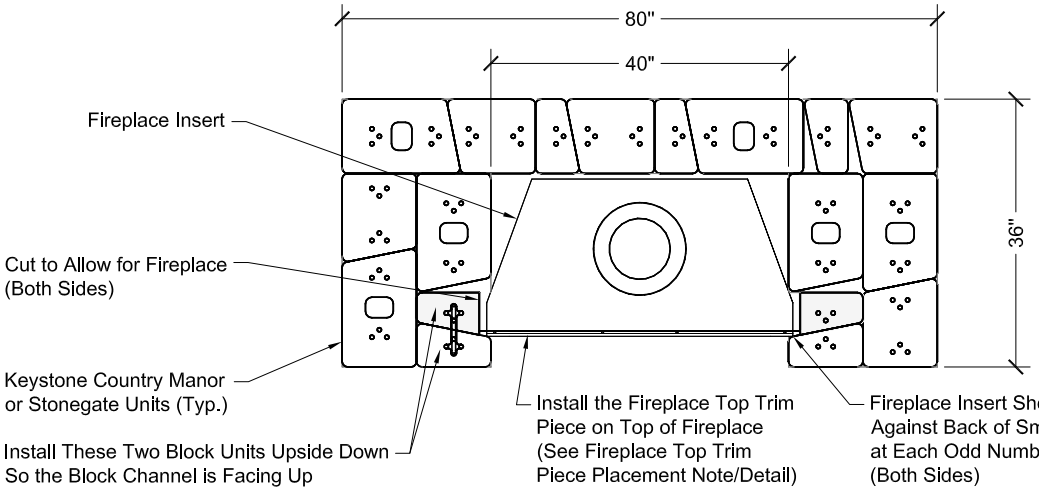

8th Course Plan

9th Course Isometric

Fireplace Note:

Install fireplace and chimney components as per fireplace manufacturers installation instructions.

Note:

Steel lintel installer to remove the two (2) front S.S.top spacers on supplied fireplace insert that will conflict w/steel lintel. Remove screws and remove brackets, they will not be needed.

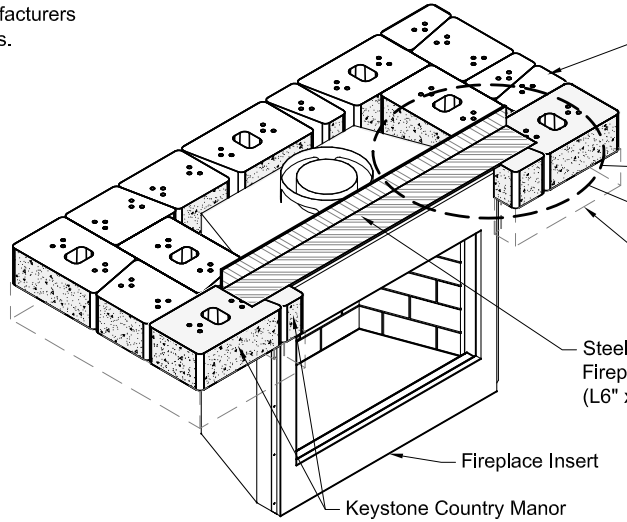

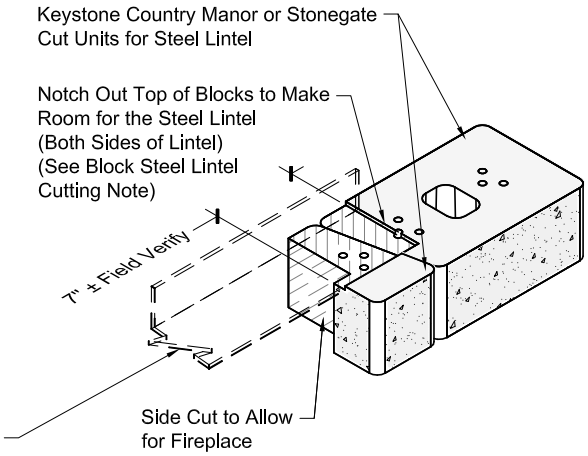

Block Steel Lintel Cutting Detail

Block Steel Lintel Cutting Note:

Position steel lintel to allow a minimum of 1/2" space between the steel lintel and the fireplace flue.

Prior to installing steel lintel, use a wheel grinding tool to notch out top of block creating a level shelf to place steel lintel, such that lintel is flush with top of cut block. Block units to be cut for steel lintel are shown with solid hatching.

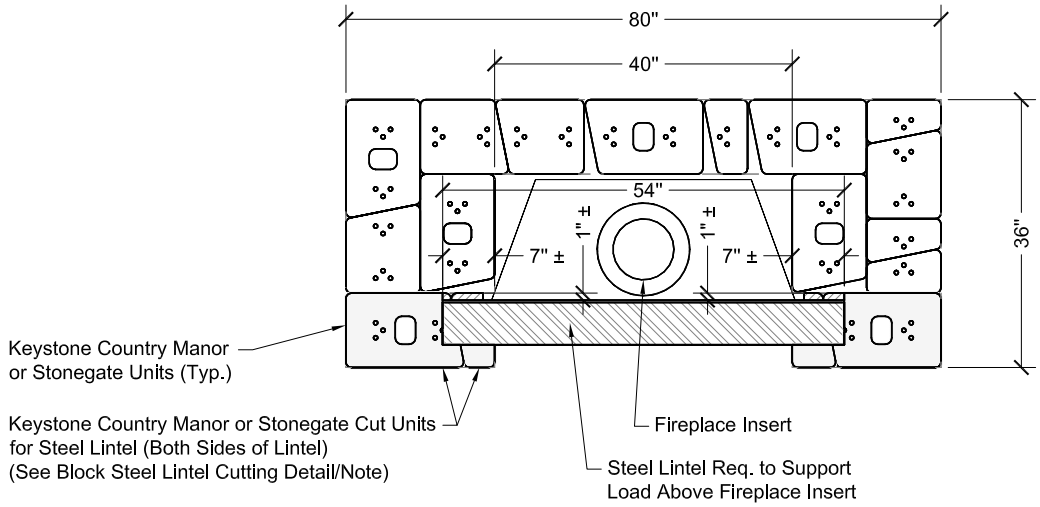

9th Course Plan

10th Course Isometric

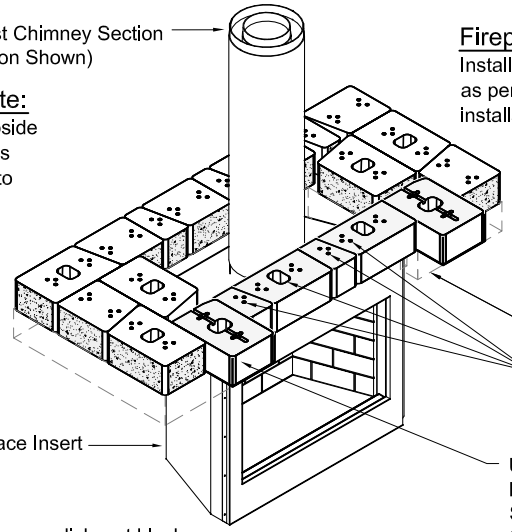

Cantilever Support Block for Mantel Note:

Install cantilever support blocks for the mantel upside down so the block channel is facing up. Pin holes from underside of inverted units should be used to attach the mantel piece w/lag bolts and washers

Temporary Block Support Note:

Build temporary support up from 2nd course hearth capping to support blocks resting on steel lintel using wood or other rigid support material until sufficient weight from courses above will safely hold steel lintel blocks in place, then remove temporary support.

Block Cutting Note:

Using a concrete saw or wheel grinder tool w/masonry disk, cut block units as needed. Block units to be cut due to obstruction are labeled with solid hatching. Block units to be cut to fit are labeled with angular hatching.

Fireplace Note:

Install fireplace and chimney components as per fireplace manufacturers installation instructions.

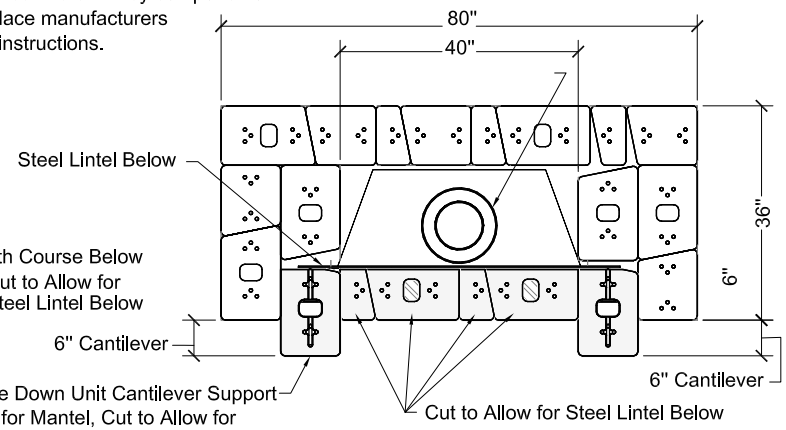

10th Course Plan

10th Course Mantel Isometric

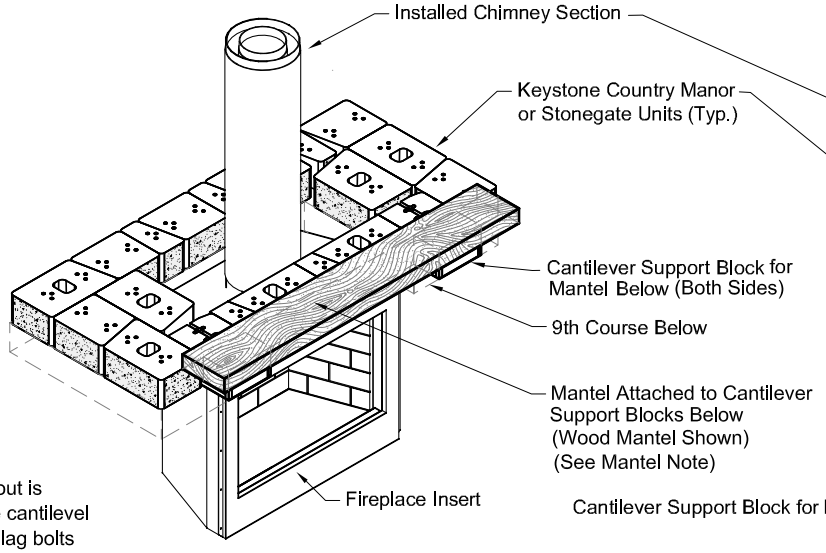

Mantel Note:

Mantel piece as per home owners interest. Pin holes and channels in the cantilever blocks may be used to attach the mantel piece. Attach mantel piece once fireplace and chimney build out is completed.

For Wood Mantel:

Once fireplace and chimney build out is completed attach the mantel to the cantilevel blocks using a minimum 3/8" steel lag bolts w/washers to fasten to mantel above.

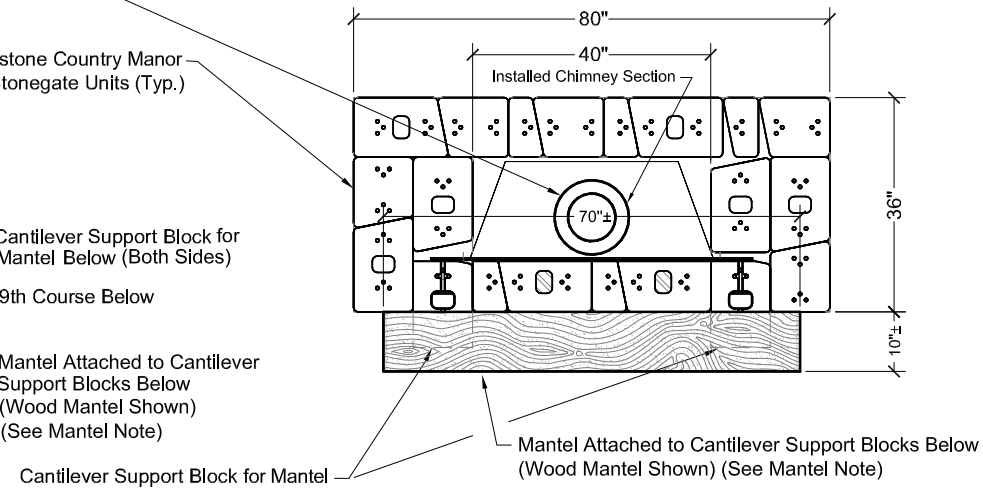

10th Course Mantel Plan

11th Course Isometric

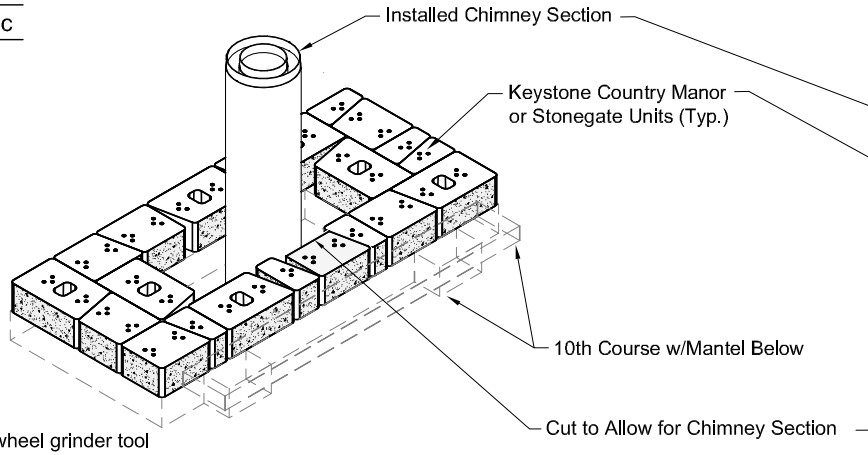

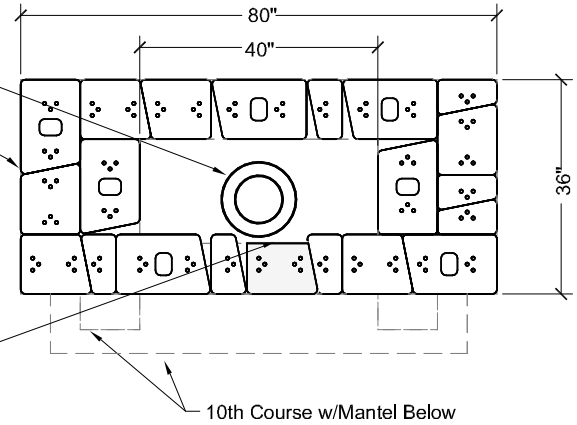

11th Course Plan

Block Cutting Note:

Using a concrete saw or wheel grinder tool w/masonry disk, cut block units as needed.
Block units to be cut due to obstruction are labeled with solid hatching.
Block units to be cut to fit are labeled with angular hatching.

12th Course Isometric

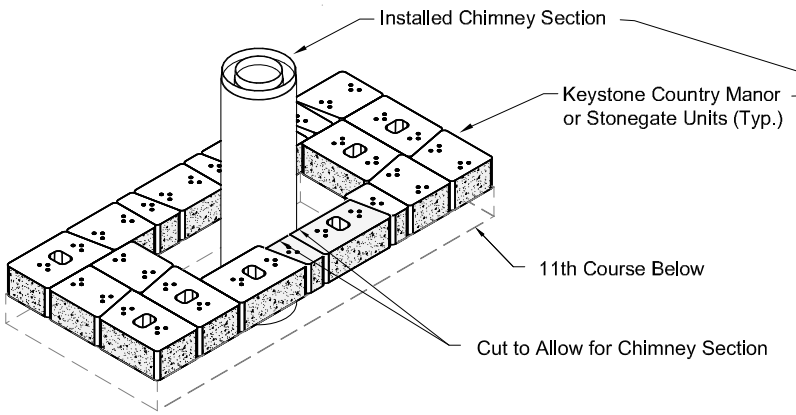

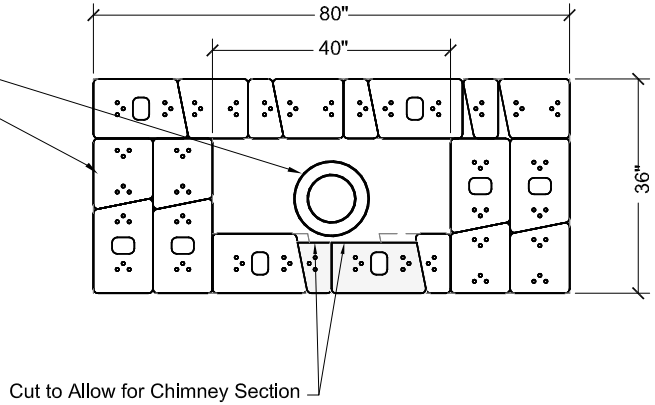

12th Course Plan

Block Cutting Note:

Using a concrete saw or wheel grinder tool w/masonry disk, cut block units as needed.
Block units to be cut due to obstruction are labeled with solid hatching.
Block units to be cut to fit are labeled with angular hatching.

12th Course Capping Isometric

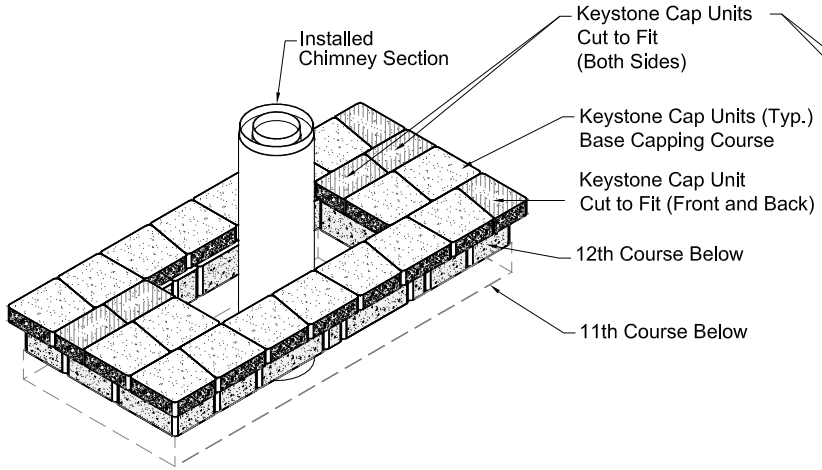

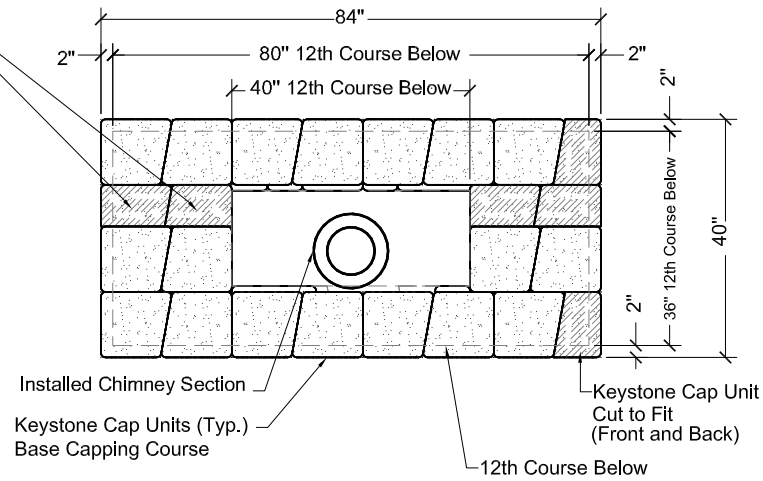

12th Course Capping Plan

Block Cutting Note:

Using a concrete saw or wheel grinder tool w/masonry disk, cut block units as needed.
Block units to be cut due to obstruction are labeled with solid hatching.
Block units to be cut to fit are labeled with angular hatching.

13th Course Isometric

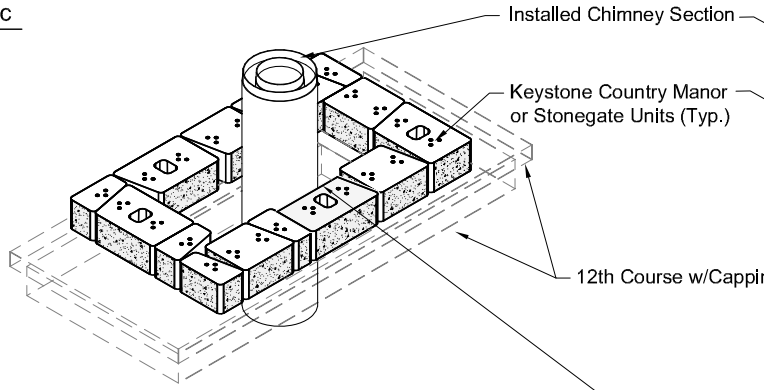

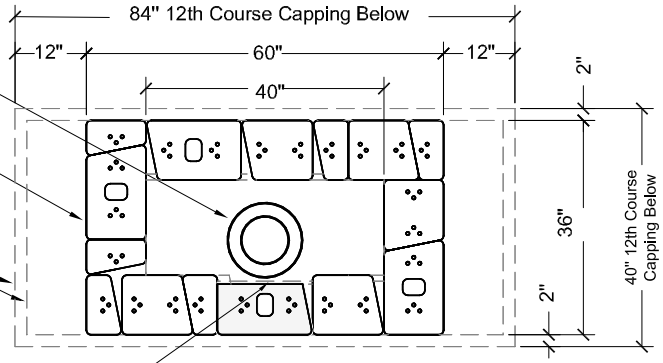

13th Course Plan

Block Cutting Note:

Using a concrete saw or wheel grinder tool w/masonry disk, cut block units as needed.
Block units to be cut due to obstruction are labeled with solid hatching.
Block units to be cut to fit are labeled with angular hatching.

14th Course Isometric

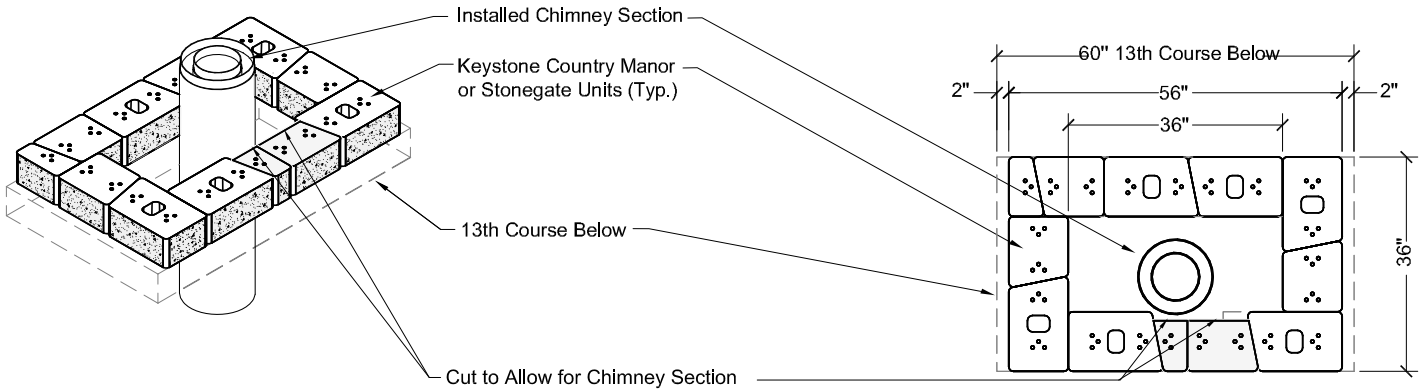

Block Cutting Note:

Using a concrete saw or wheel grinder tool w/masonry disk, cut block units as needed.
Block units to be cut due to obstruction are labeled with solid hatching.
Block units to be cut to fit are labeled with angular hatching.

14th Course Plan

15th Course Isometric

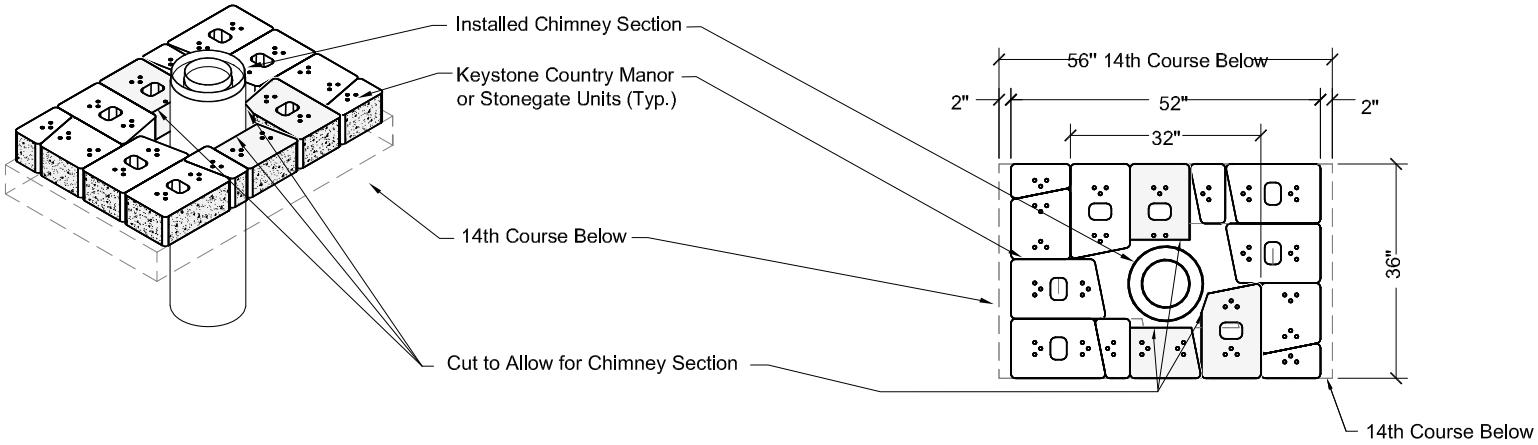

Block Cutting Note:

Using a concrete saw or wheel grinder tool w/masonry disk, cut block units as needed.
Block units to be cut due to obstruction are labeled with solid hatching.
Block units to be cut to fit are labeled with angular hatching.

15th Course Plan

15th Course Capping Isometric

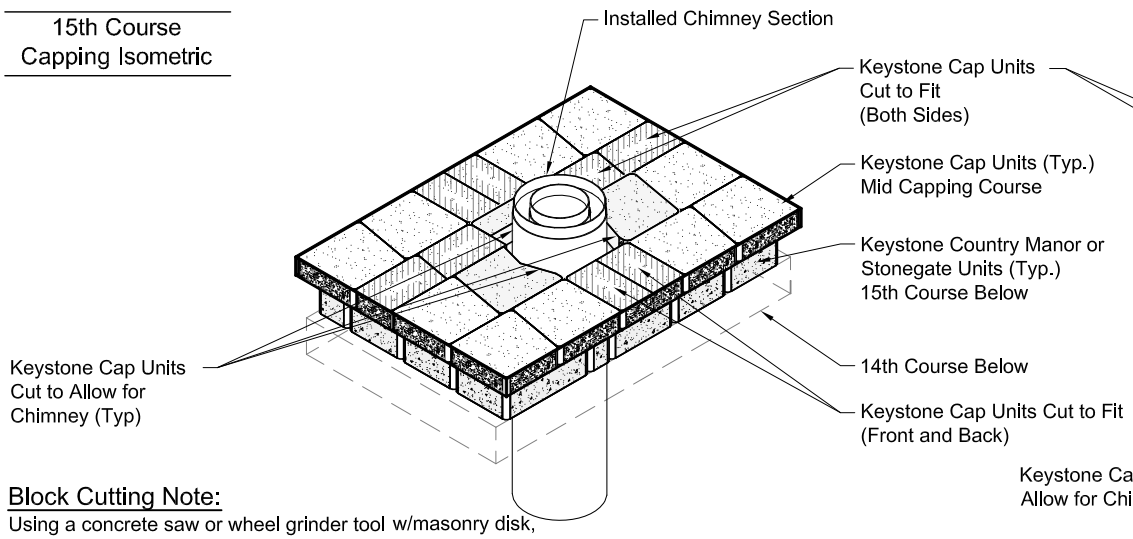

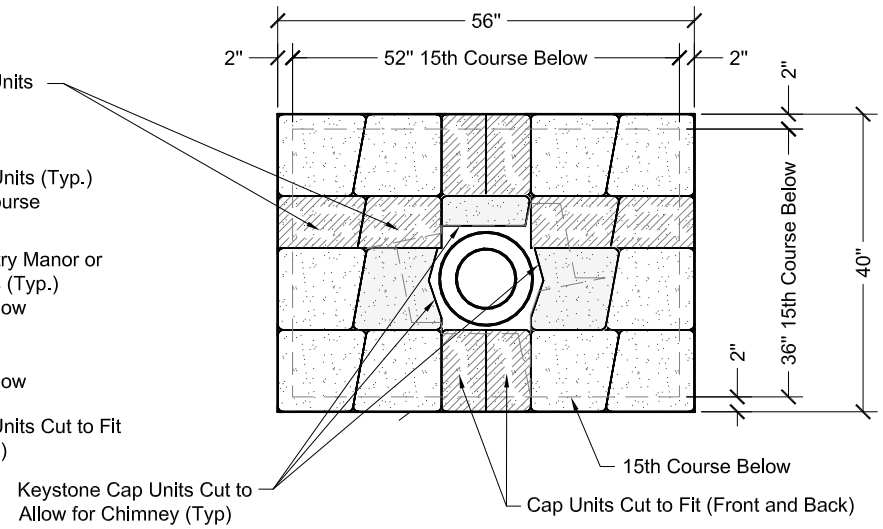

15th Course Capping Plan

Block Cutting Note:
Using a concrete saw or wheel grinder tool w/masonry disk, cut block units as needed. Block units to be cut due to obstruction are labeled with solid hatching. Block units to be cut to fit are labeled with angular hatching.

16th Course Isometric

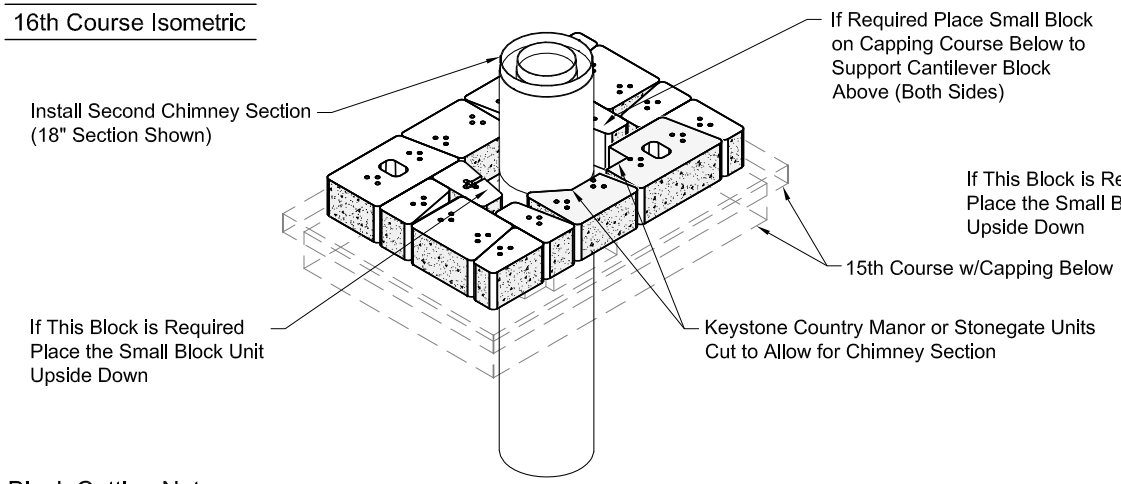

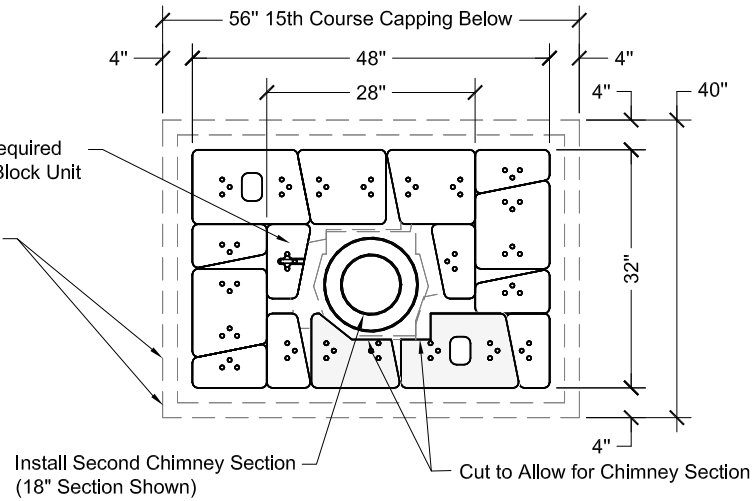

16th Course Plan

Block Cutting Note:
Using a concrete saw or wheel grinder tool w/masonry disk, cut block units as needed. Block units to be cut due to obstruction are labeled with solid hatching. Block units to be cut to fit are labeled with angular hatching.

17th Course Isometric

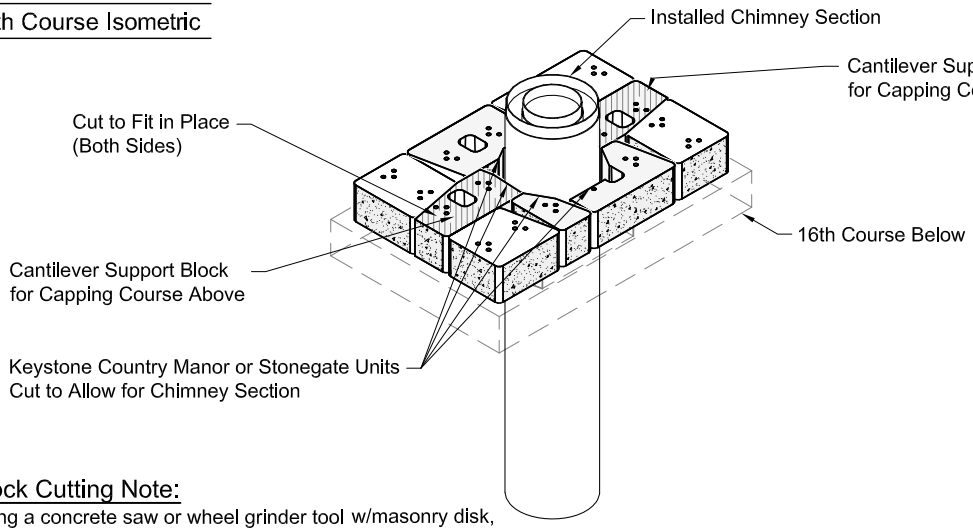

Block Cutting Note:
Using a concrete saw or wheel grinder tool w/masonry disk, cut block units as needed. Block units to be cut due to obstruction are labeled with solid hatching. Block units to be cut to fit are labeled with angular hatching.

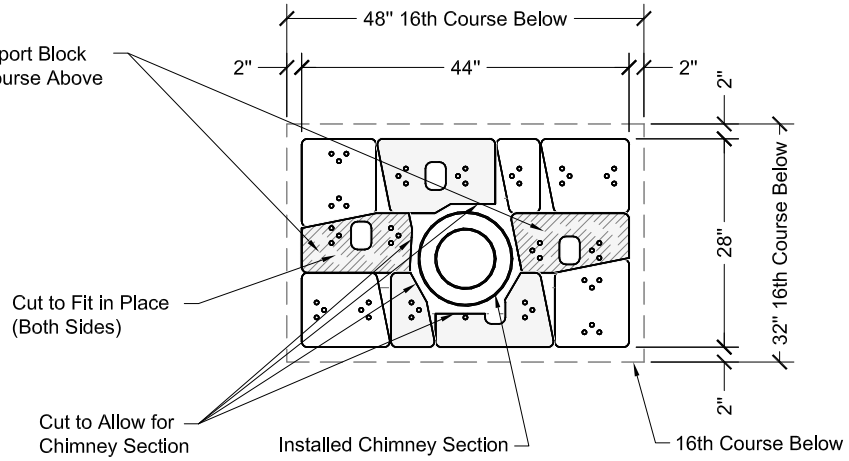

17th Course Plan

17th Course Capping Isometric

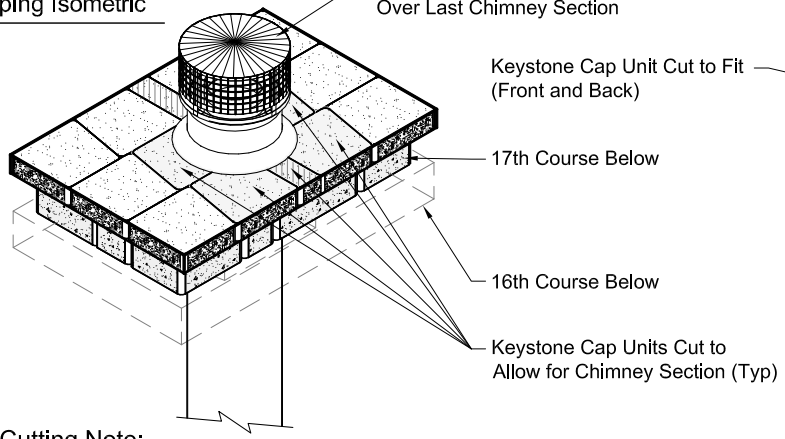

Block Cutting Note:
Using a concrete saw or wheel grinder tool w/masonry disk, cut block units as needed. Block units to be cut due to obstruction are labeled with solid hatching. Block units to be cut to fit are labeled with angular hatching.

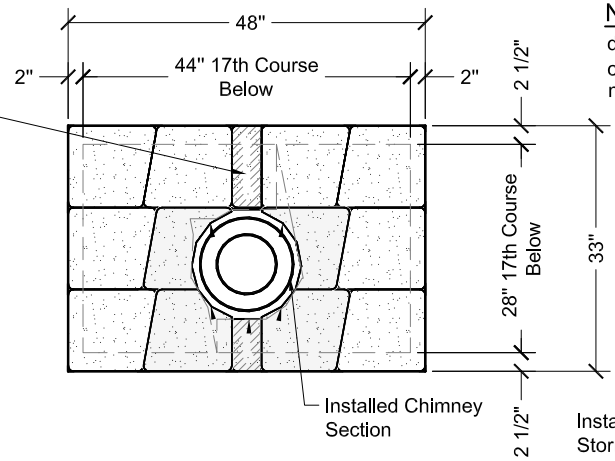

Note: Install storm collar over chimney and down to top capping course prior to installing chase termination cap. Seal as per fireplace manufacturers installation instructions.

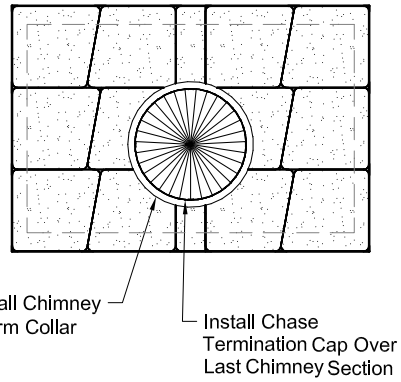

17th Course Capping Plan